CONCRETE SIGN BASE

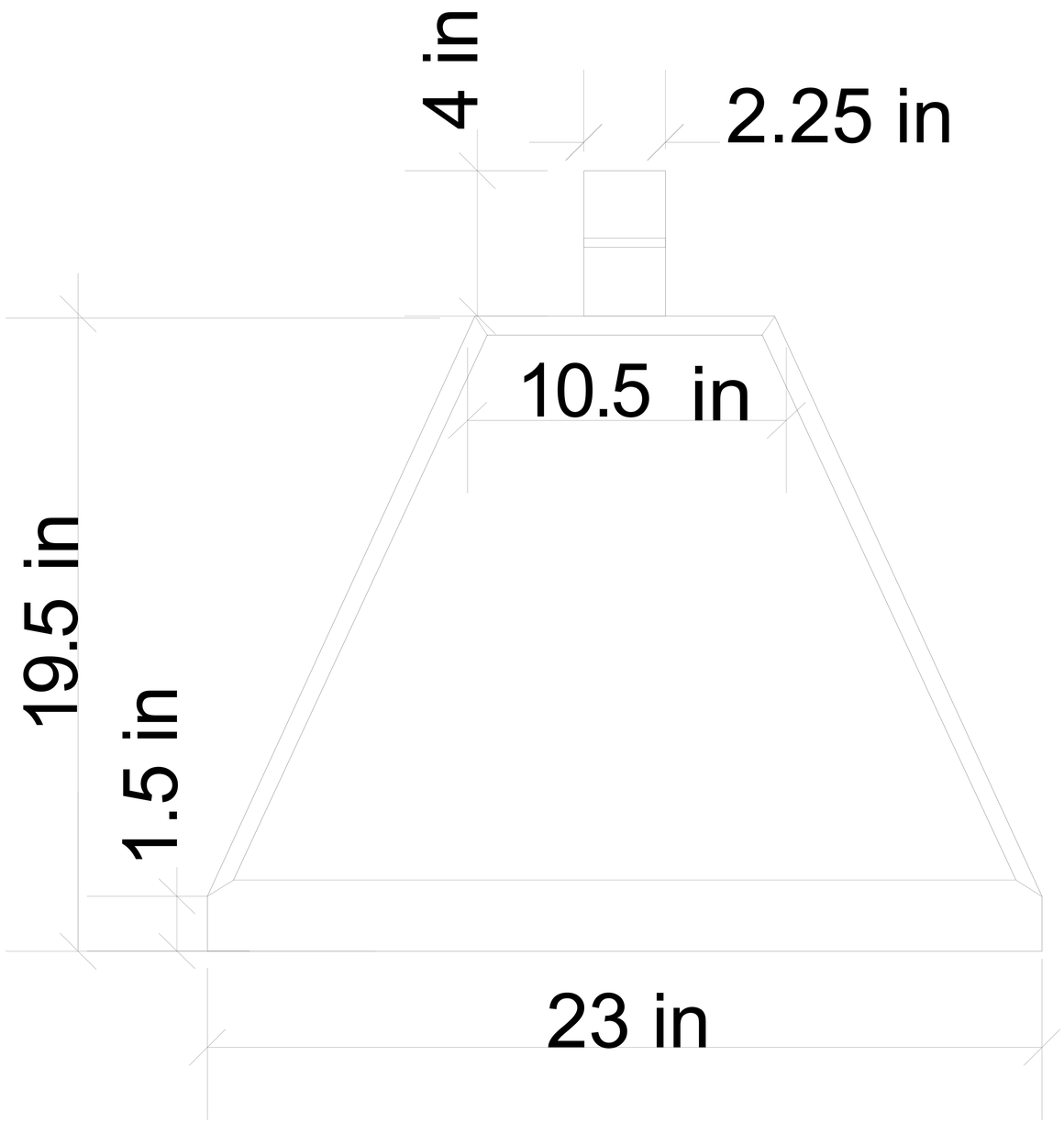

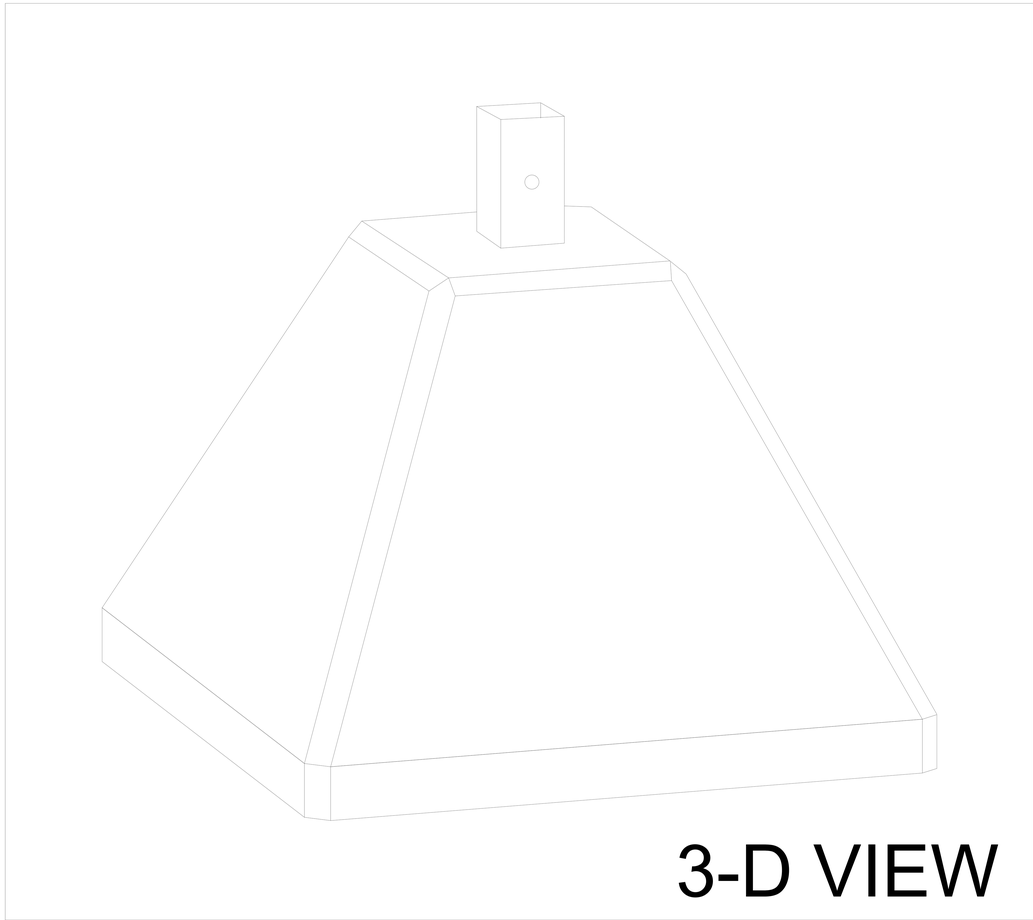

Air Entrained Concrete
4500 p.s.i.

Length: 23"

Height: 19.5"

Width: 23"

Weight: 375 lbs.

OTTO'S
PARKING MARKING
COMPANY
GREENWOOD, IN
OFFICE (317) 882-8933
TOLL FREE (800) 888-7996
FAX (317) 888-7628